iND83213ACS01 SNPD User Guide V0.2

Preliminary

1 REVISION HISTORY

Table 1 Revision History

Rev #	Date	Action	By
0.1	09/12/2023	First draft	JackPAN 、 Levi YE
0.2	12/5/2024	Modify Store NAD Command Frame Description	Winter

Preliminary

2 TABLE OF CONTENTS

1 REVISION HISTORY 2

2 TABLE OF CONTENTS 3

3 SYSTEM OVERVIEW 4

3.1 Principle 4

3.2 Flow Chart of SNPD (Auto Addressing) 5

3.3 COmmand Set 6

3.3.1 Force Switch On Command 6

3.3.2 Auto Addressing Init Command 6

3.3.3 Assign NAD Command 6

3.3.4 Store NAD Command 6

3.3.5 Exit Auto Addressing Command 7

Preliminary

3 SYSTEM OVERVIEW

SNPD (Slave Node Position Detection) is used to assign slave address (auto addressing) and identify the position of the slave device, which is very convenient in the real LIN system application.

3.1 PRINCIPLE

In order to achieve SNPD function (Auto Addressing), a special physical connection is needed below:

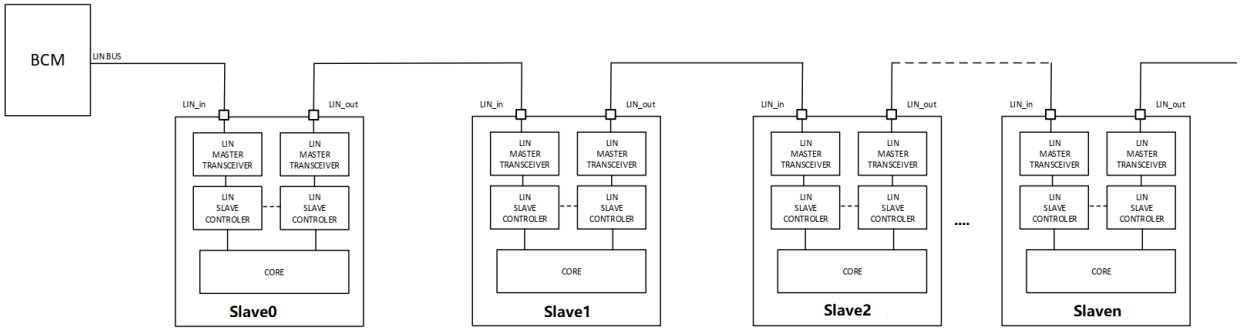

Every slave has the ability to switch off/on the connection between LIN_IN pin and LIN_OUT pin in the slave, which means that it can switch off/on the communication to the following devices.

Preliminary

3.2 Flow Chart of SNPD (Auto Addressing)

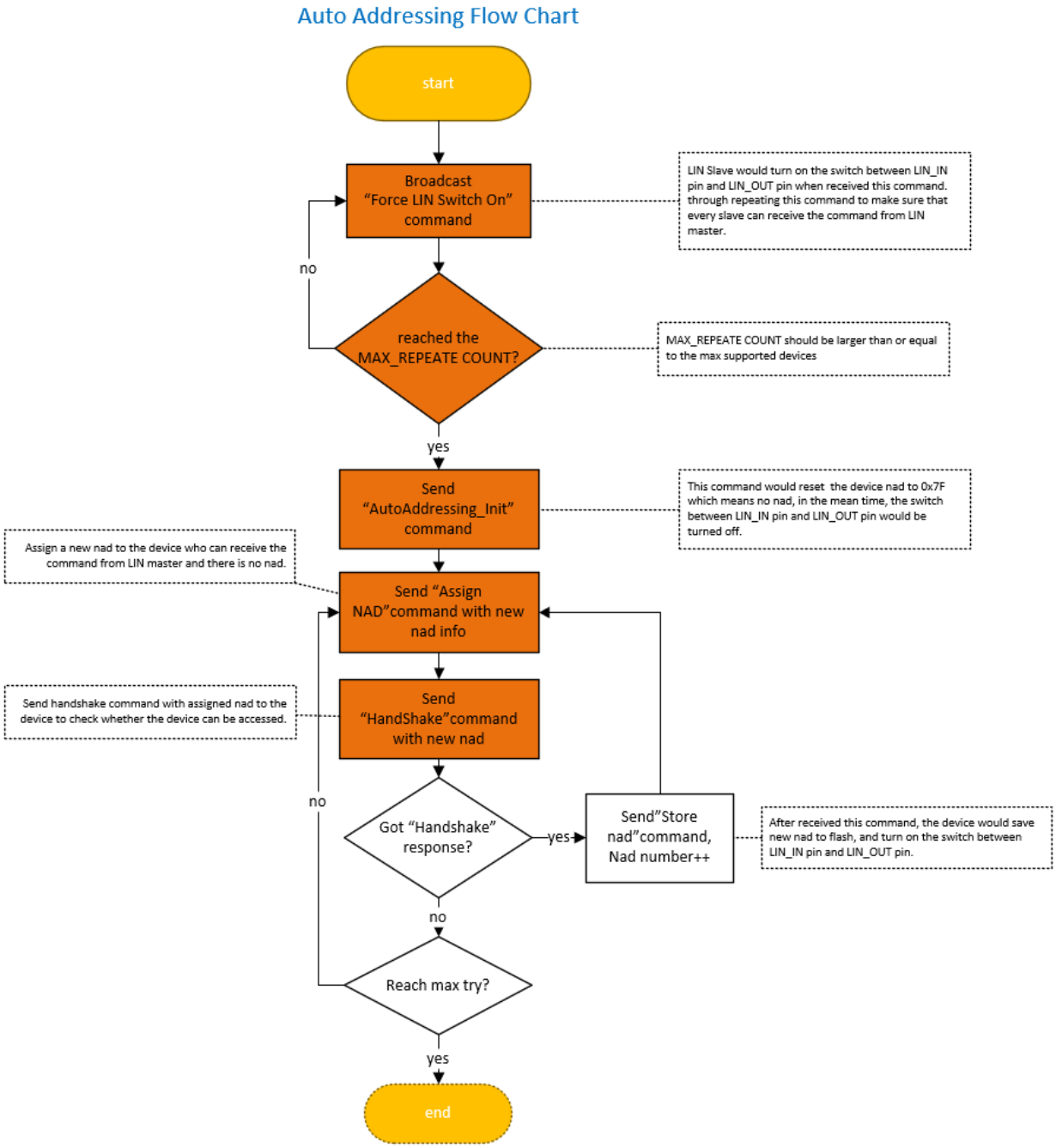

3.3 COMMAND SET

3.3.1 Force Switch On Command

Table 1-1. Force Switch On Command

Type	REQ/ACK	FID	DATA0	DATA1	DATA2	DATA3	DATA4	DATA5	DATA6	DATA7
SF	Request	0x3C	NAD=0x7F	PCI=0x06	SID=0xB5	0xFF	0x7F	0x00	0xAA	0xFF

In order to certainly make sure that every slave device can return to the initial state(the switch between LIN_IN and LIN_OUT pin would be turned on after received this command), LIN master needs to send this command several times which is based on the maximum capacity on the bus, for example: the maximum supported devices in LIN network is 16, this command needs to be sent 16 times at least.

3.3.2 Auto Addressing Init Command

Table 1-2. Auto Addressing Init Command

Type	Request	0x3C	DATA0	DATA1	DATA2	DATA3	DATA4	DATA5	DATA6	DATA7
SF	Request	0x3C	NAD=0x7F	PCI=0x06	SID=0xB5	0xFF	0x7F	0x01	0xAA	0xFF

The switch between LIN_IN and LIN_OUT pin would be turned off and set the NAD to 0x7F which means no NAD after a device received this command, so only the device closed to the LIN master can received the command from LIN master.

3.3.3 Assign NAD Command

Table 1-3. Assign NAD Command

Type	Request	0x3C	DATA0	DATA1	DATA2	DATA3	DATA4	DATA5	DATA6	DATA7
SF	Request	0x3C	NAD=0x7F	PCI=0x06	SID=0xB5	0xFF	0x7F	0x02	0xAA	new NAD

Only the device which is no NAD would be assigned an NAD after received this command. In order to validate whether a device has been assigned a dedicated NAD, master can send an information request command(Handshake command flow chart mentioned) with this assigned NAD to check whether an expected response would be sent back from the device.

3.3.4 Store NAD Command

Table 1-4. Store NAD Command

Type	Request	0x3C	DATA0	DATA1	DATA2	DATA3	DATA4	DATA5	DATA6	DATA7
SF	Request	0x3C	NAD	PCI=0x06	SID=0xB5	0xFF	0x7F	0x03	0xAA	0xFF

The device which was assigned NAD would store the NAD to Flash and turn on the switch between LIN_IN and LIN_OUT pin.

Preliminary

3.3.5 Exit Auto Addressing Command

Table 1-5. Exit Auto Addressing Command

Type	Request	0x3C	DATA0	DATA1	DATA2	DATA3	DATA4	DATA5	DATA6	DATA7
SF	Request	0x3C	NAD=0x7F	PCI=0x06	SID=0xB5	0xFF	0x7F	0x04	0xAA	0xFF

The device would exit Auto Addressing Mode after received this command.

Preliminary